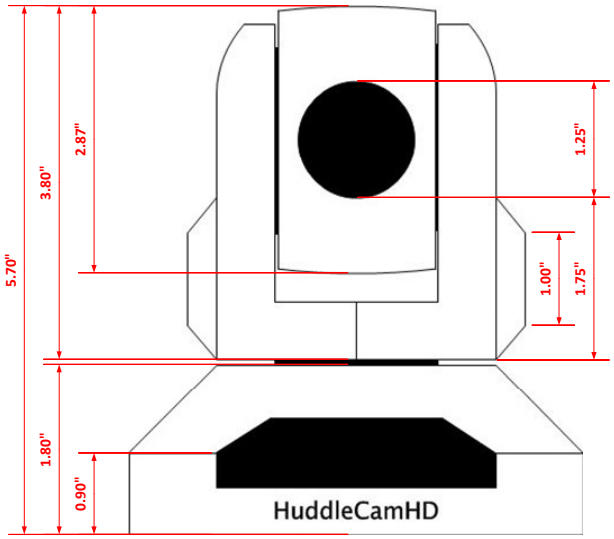
5.70"
3.80"
2.87"
1.25"
1.00"
1.75"
1.80"
0.90"
HuddleCamHD

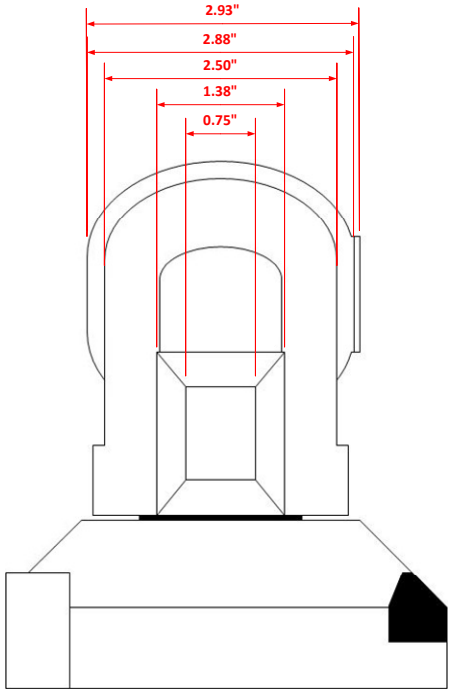
2.93"
2.88"
2.50"
1.38"
0.75"

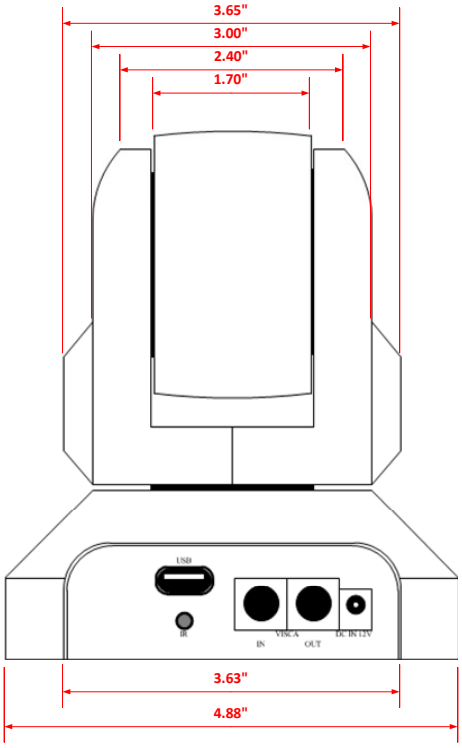
3.65"
3.00"
2.40"
1.70"
USB
IR
IN
VISCA
OUT
DC IN 12V
3.63"
4.88"

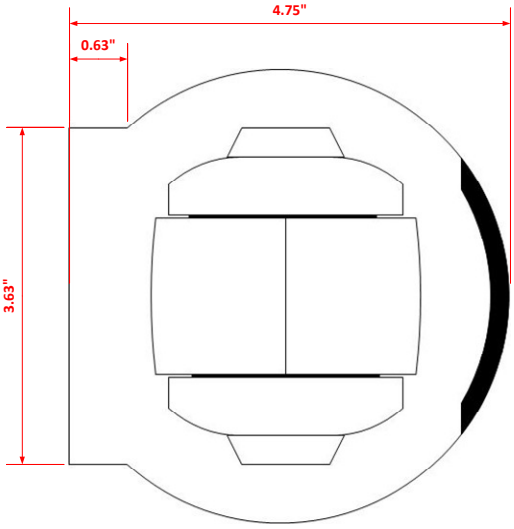
4.75"
0.63"
3.63"